Effects of particle-surface-properties on mechanical behavior, & calibration of DEM models

DOE-AMO sponsored Workshop on Powder Dynamics for AM, August 10, 2018

Otis Walton

LLNL-PRES-736682

LLNL-PRES-736682
This work was performed under the auspices of the U.S. Department of Energy by Lawrence Livermore National Laboratory under contract DE-AC52-07NA27344. Lawrence Livermore National Security, LLC

Lawrence Livermore National Laboratory

Overview of Discrete Element Method (DEM)

The Discrete Element Method (DEM) is a reduced-order approach that avoids using a fine Finite Element (FE) meshes and elastic-wave-based analysis of interactions between particles. As particle sizes decrease, surface phenomena become more important. Cohesion exceeds weight below sizes of around 100µm (depending on surface energy). Van der Waals cohesion alone can cause plastic surface deformation at contacts. Surface asperities reduce contact area. Many of these effects are approximated by one DEM contact-model parameter, the "effective surface energy". Coupled effects are also important – plastic deformation increases rolling resistance, which results in very low bulk-powder 'sifted' density values. Other synergistic effects will be discussed.

Outline:

- **Quick summary of the 'usual' description of DEM simulations and their applications**
- **Description of DEM as a 'reduced order method' and justification of when it is appropriate to use**
- **Which of the 4-modes of relative motion matter <u>for which size ranges</u>**
- **Some overlooked 'errors' in existing models**
- **Synergistic effects that could (should?) be included in interparticle interactions**
- **Effects not usually included, but could be added (like interstitial air effects) – models are available.**
- **Measurements for model calibration need to be at appropriate load and deformation levels.**

DEM simulations can be used to study powder spreading

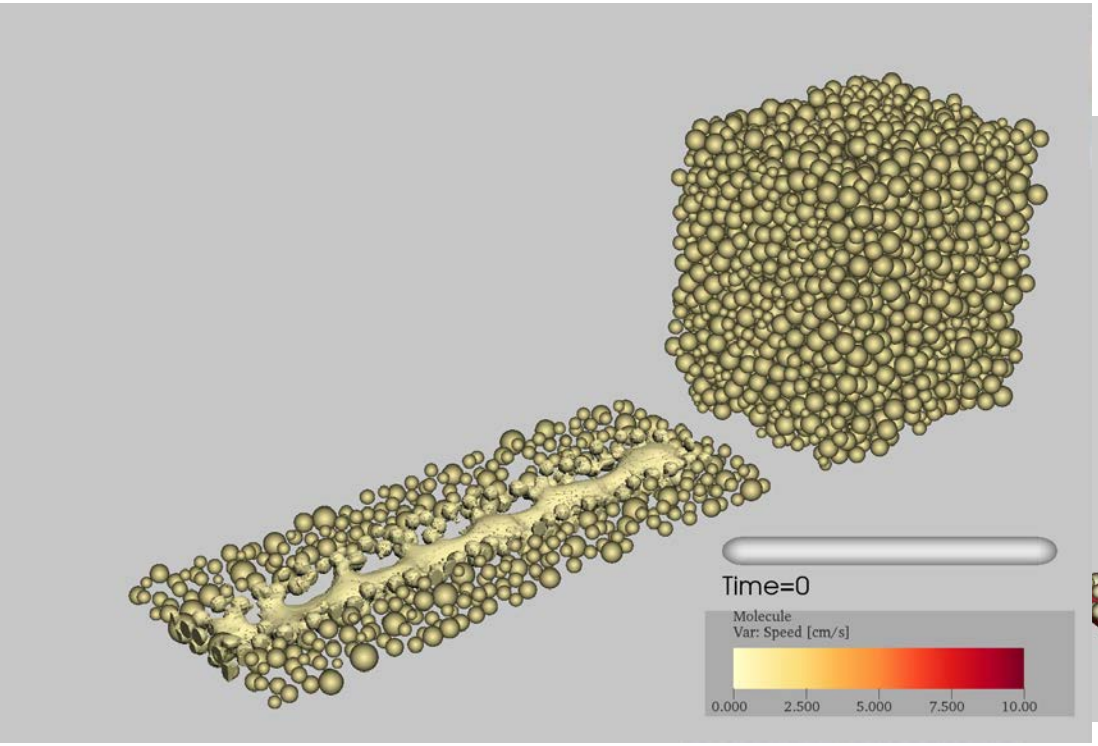

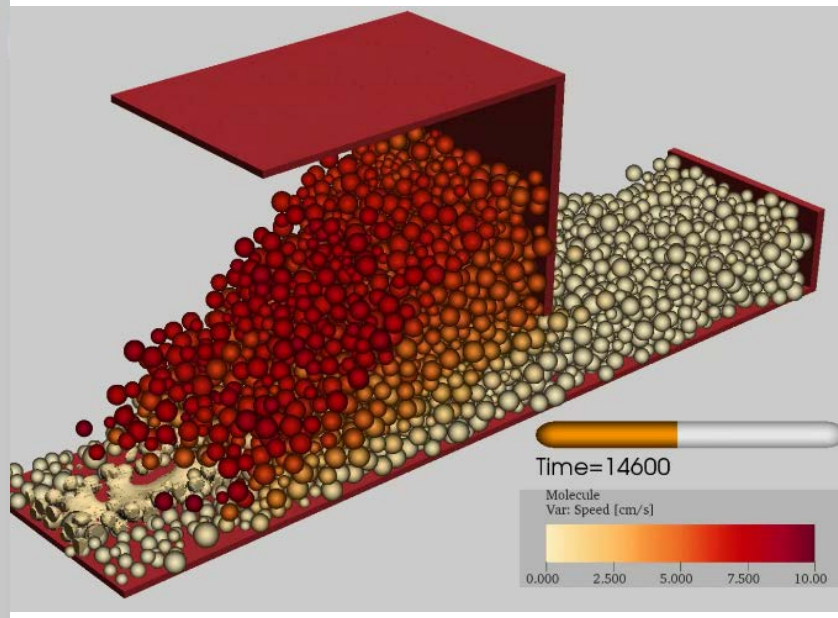

Multilayer simulations require coupling to/from laser-scanning melt/re-solidification model & transfer of powder and part surface geometries back to DEM powder spreading simulation for each successive layer (simulation from Eric Herbold & Dan Moser, LLNL)

The above simulation shows the 'boiler plate' needed for multilayer simulations, but is not a 'calibrated' DEM model (cohesion and rolling resistance were not included in this simulation)

Example: 316L-Stainless powder, spread under ambient lab conditions

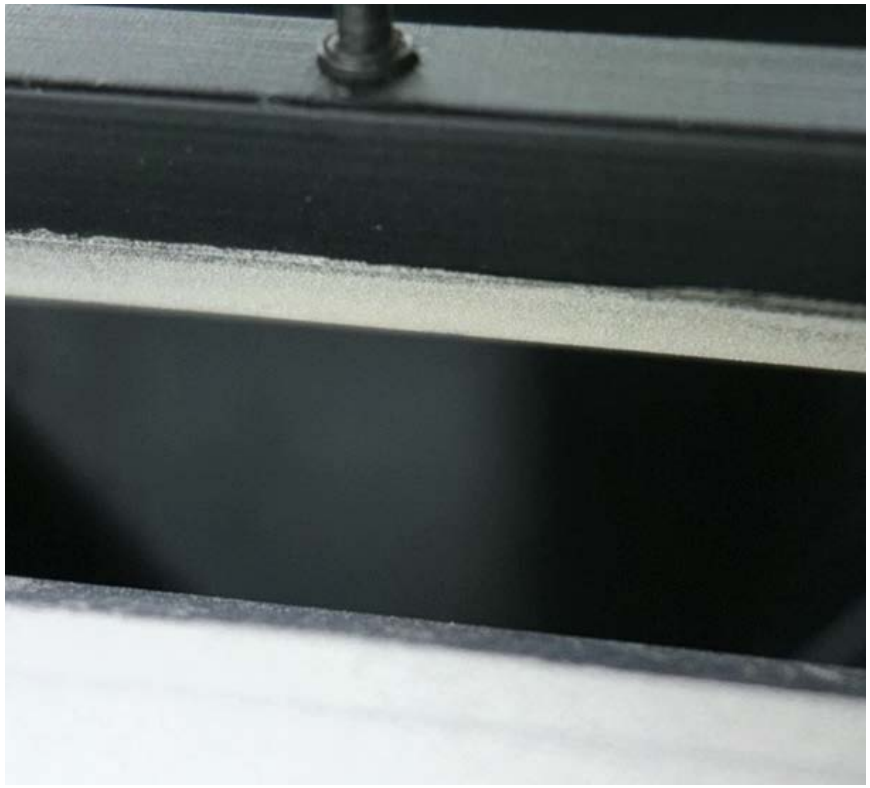

Note: Rubber spreader-blade already has a layer of powder adhering to it from previous layer; also, small 'cliffs' form in the powder in front of blade, and small 'random' avalanches occur across the face of the spreader blade. (We have not made similar videos under argon, or dry air). LLNL now has two model spreaders (built by students at Cal Poly & UC Santa Barbara). The 2nd model will be operational later this summer.

Overview of Discrete Element Method (DEM)
(w/'soft' contacts)

No assumed constitutive model. Instead, particle force-displacement relations are prescribed, and the simulation accounts for all interactions among the interacting particles in an assembly.

Advantages:

- **No assumptions about contacts being at their friction limit – force builds up to friction-limit.**
- **Fabric matrix (can be) calculated from the particle positions, not prescribed.**
- **Recent-strain-history dependence of granular solids can be 'correctly' represented.**
- **Failure envelope arises naturally from behavior of assembly of frictional particles.**
- **Shear-dilatency and shear-enhanced-compaction are results of simulation, not prescribed.**
- **Reasonably well-accepted models exist for interparticle friction, van der Waals cohesion, liquid-bridge cohesion, initially-cemented contacts. Physically-reasonable models exist for effects of plasticity, inelasticity during contacts, bending, rolling, twisting resistance.**
- **Arbitrary shapes can (theoretically) be modeled (more limited range of shapes in practice).**
- **Unlimited deformations and strains of assemblies of particles with no remeshing.**

Disadvantages:

- **Computationally expensive, only physically small regions can be simulated in 'reasonable' time.**
- **Effects of size distributions & shape distributions on macro-scale behavior are uncalibrated [Macro-scale effects of assembly statistical properties and effects of each new particle-scale interaction model parameter have to be determined by 'empirical numerical experiments']**
- **Scaling rules for using larger, or softer, particles (for efficiency) are only partially verified [and await further empirical numerical 'experiments' on the scaled assemblies]**

Overview of Discrete Element Method (DEM)

Hertz' elastic solution for force displacement behavior, & resulting contact time justifies mode-separation arguments for particles w/'soft' contacts (no need for full dynamic wave FE simulation)

Debbie Hagen (summer intern LLNL 1984)

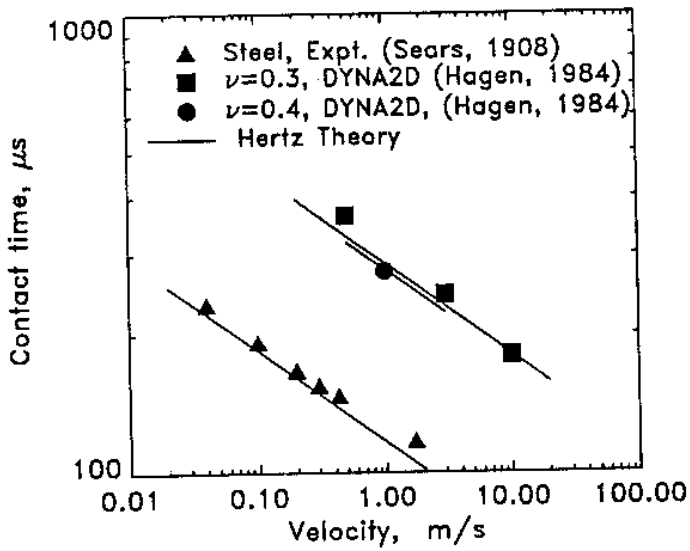

Hertz solved the linear elasticity equations for elastic bodies in contact (Hertz, 1881; Timoshenko and Goodier, 1970; Johnson, 1985). The resulting quasi static force displacement relation for displacements along the line of centers between two contacting, identical elastic spheres is given by

$$F = \frac{1}{3}\frac{E}{1-\nu^2}\sqrt{2R}\ \alpha^{3/2} \qquad (25.9)$$

where E is Young's modulus, ν is Poisson's ratio, R is the spheres' radius, and α is the relative displacement after initial contact

contact time varies nearly as the inverse 1/5 power of the relative impact velocity -- as would be predicted by the Hertz contact theory if Equation 25.9 represents the force-displacement behavior of a nonlinear spring acting between two rigid spheres (Timoshenko and Goodier, 1970),

$$\tau = 2.94\left(\frac{5\sqrt{2}\pi\rho}{4}\ \frac{1-\nu^2}{E}\right)^{2/5}\frac{R}{v_n^{1/5}}\ . \qquad (25.10)$$

where τ is the contact time, ρ is the density of the spheres and v_n is the incident relative velocity in the normal direction.

Typical contact time is >100 sound transit times across sphere ➔ quasi-static F vs. δ is a valid approx.

DEM –simulation of meso-scale particle motion (usually applied to simulations of 'particles' in the a finite size range spanning no more than one-order of magnitude, somewhere between microns and meters)

Differences between Molecular Dynamics & Discrete Element Method

Energy is generally conserved in Molecular Dynamics Simulations

(non-equilibrium, constrained dynamics are an exception)

In DEM simulations energy is 'dissipated'
(e.g. lost to 'heat' which is considered to be a mode and scale so far removed from the scale of the particles that it is unrecoverable as Kinetic Energy of the particles).

Most interactions are state-functions in MD simulations.

Many of the interactions (and especially friction) in DEM simulations of meso-scale particles are history-dependent.
(this requires different data structures in the simulation model)

Fortunately there are enough similarities that up to 90% of the numerical methods can be directly transferred from MD to DEM (e.g. the LAMMPS MD code at Sandia)

What should be in a Comprehensive Contact Model?

4 Components: **Normal (including cohesion), Tangential, Bending, Twisting**

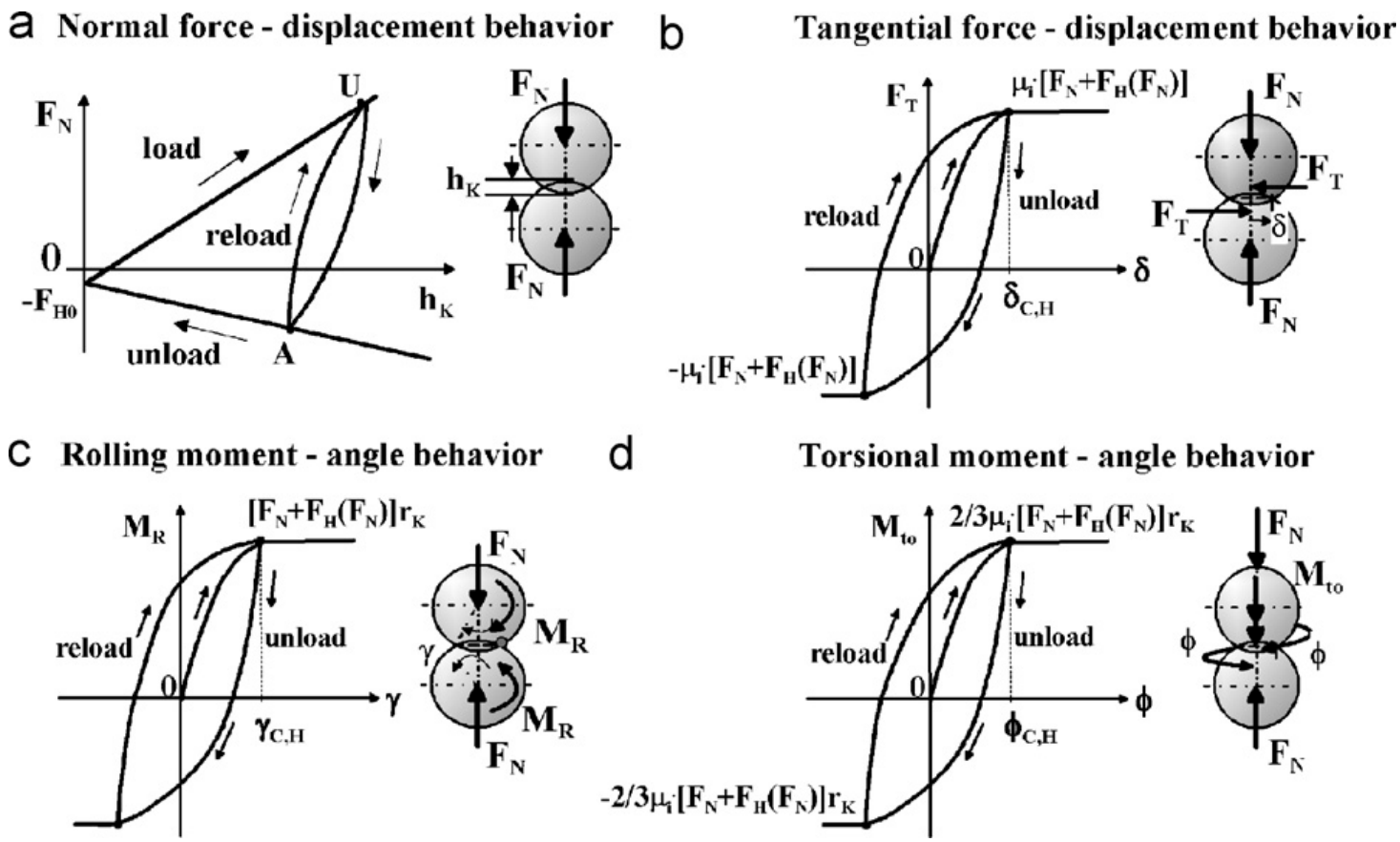

Jürgen Tomas, "Adhesion of ultrafine particles—Energy absorption at contact," Chemical Engineering Science 62 (2007) 5925– 5939

(a) & (b) are in all DEM codes, (c) recently added to many, (d) added but of unknown significance

FEM analyses & theories have been used to generate approximate force-displacement relations, especially in normal-direction

1984 D. Hagen, Quasi-static & dynamic (Dyna2D- LLNL) simulations normal impacts

1985 J. Brandies, Quasi-static Elastic-plastic normal direction (Nike – LLNL)

~1988 C. Thornton et al, Elastic-Plastic FEM w/cohesion

Full (incremental) non-linear Mindlin friction model (ignores rotation effects)

1992 Y. Tsuji et al, "Hertz-Mindlin" (linearized tangential friction with non-linear normal-direction force) – introduced erroneous tangential-spring energy when normal-force increases (also coupled CFD for gas-solid effects).

1993 O. Walton, attempted non-linear Mindlin friction – introduced erroneous tangential spring energy when normal-force decreased.

~1998 L. Lesburg (w/ Vu Quoc), Abacus 3-D Elastic-Plastic Normal direction and effects on tangential stiffness

Demonstrated that initial tangential stiffness is nearly unchanged with plastic softening of normal stiffness at contact

2009 C. Wu, Dynamic 3-D FEM (LS-Dyna) frictional impact simulations, new analytic collision impulse expression

Most DEM codes today use Tsuji's "Hertz-Mindlin" form (w/spurious energy)

Position-Dependent Hysteresis is realistic description of plastic work done For Elastic-Plastic contacts

Normal Direction:

Elastic-Plastic Material: Thornton (1997), Thornton & Ning (1998), Mishra & Thornton (2002)

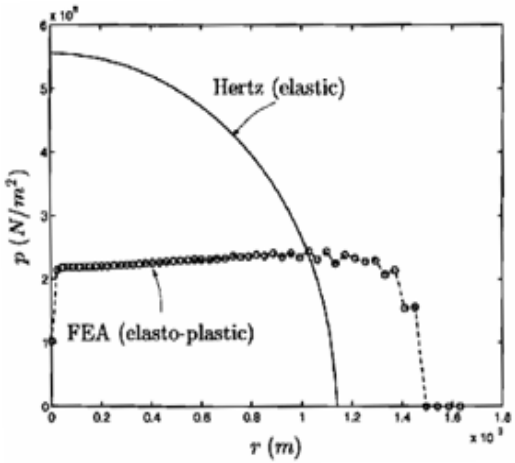

Vu-Quoc, et al. ~2000
FEM analysis.

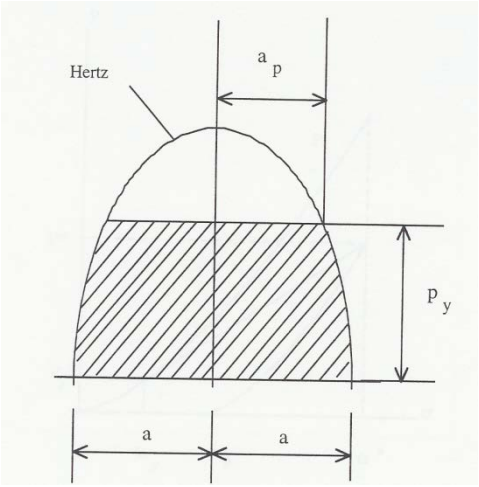

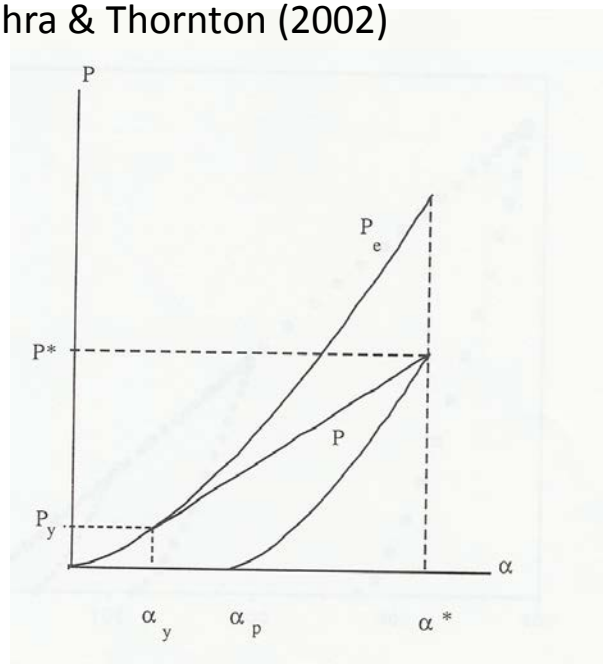

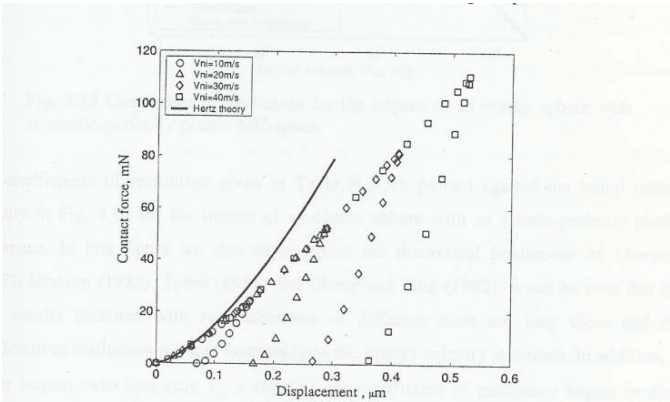

Fig. 5.12 Contact force-displacement relationships for the impact of an elastic sphere with an elastic-perfectly plastic substrate at various impact velocities.

FEM Analysis

Cohesion Plus Position-Dependent Hysteresis (Plastic/Cohesive contacts)

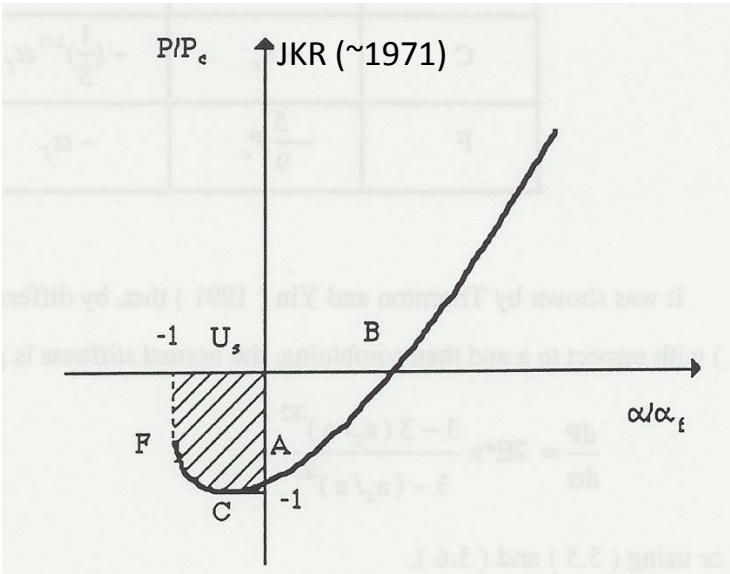

Thornton & Ning 1999)

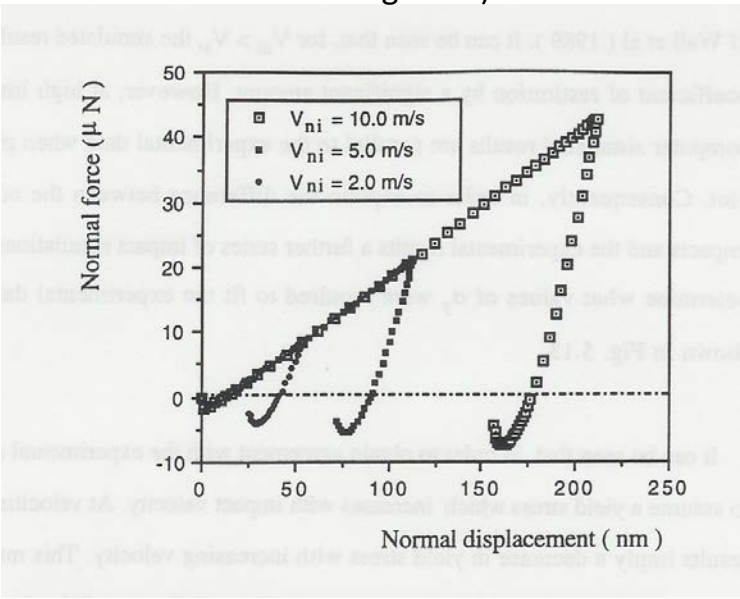

For Tangential friction coupled with cohesion, the 'cohesion' (attractive force) is added to any applied load to obtain the effective 'repulsive ' normal force for use in the friction limit.

This has not been fully verified via experiment or FEM analysis, but is physically reasonable, produces realistic appearing results,

A limited number of 3D oblique impact calculations are available for verification of DEM force-displacement relations

(e.g., elastic contacts with tangential friction compared to dynamic FE simulation of oblique impacts of spheres)

Downloaded from http://rspa.royalsocietypublishing.org/ on July 6, 2015

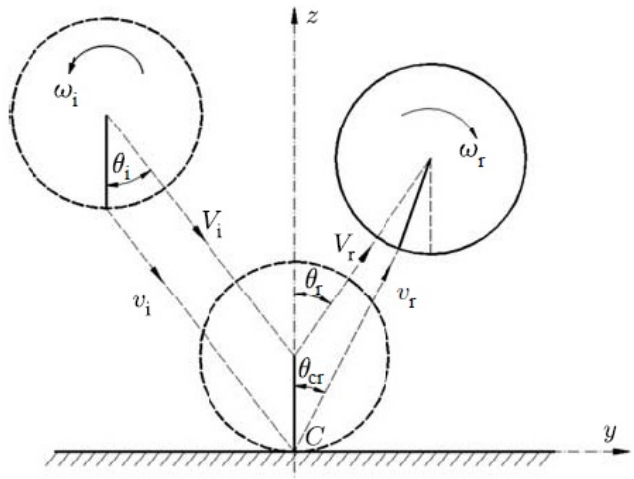

Figure 1. Diagram of the oblique impact of a sphere with a plane surface.

A semi-analytical model for oblique impacts of elastoplastic spheres

By Chuan-Yu Wu[1,*], Colin Thornton[2] and Long-Yuan Li[2]

Proc. R. Soc. A (2009) **465**, 937–960

Downloaded from http://rspa.royalsocietypublishing.org/ on July 6, 2015

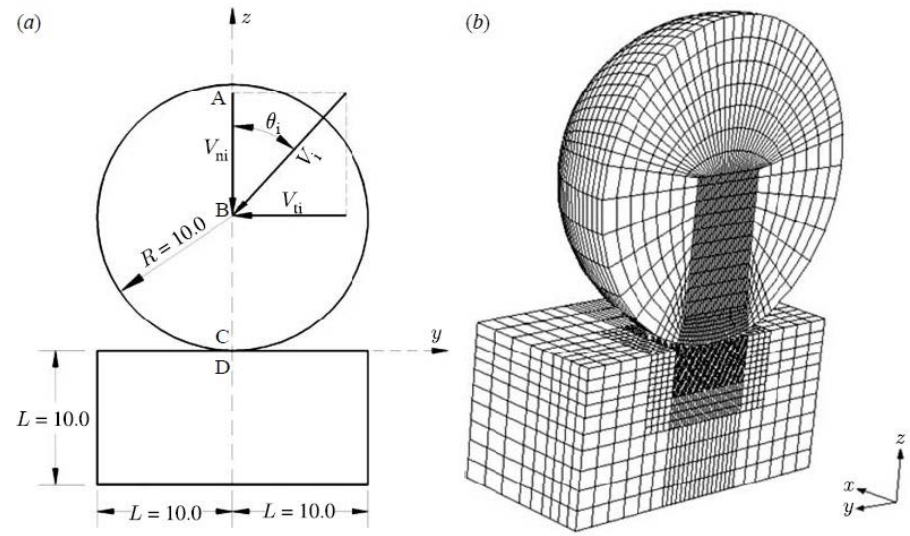

Figure 2. FE model for the oblique impact of a sphere with a half-space (unit: μm): (*a*) the model and (*b*) the finite-element meshes.

Table 1. Material properties in oblique impacts.

Friction: Mindlin-Deresiewicz (1953) model is sometimes problematic for modelers

Mindlin-Deresiewicz (1953) model has some important characteristics:

1) **Initial tangential stiffness depends on Hertz contact spot size → $K_{T_0} = f(F_N)$**
2) **Cyclic tangential displacements are hysteretic (no matter how small the amplitude)**

Correctly scaling the slope and/or the tangential force when the normal force changes requires attention to detail and understanding of the physics being modeled.

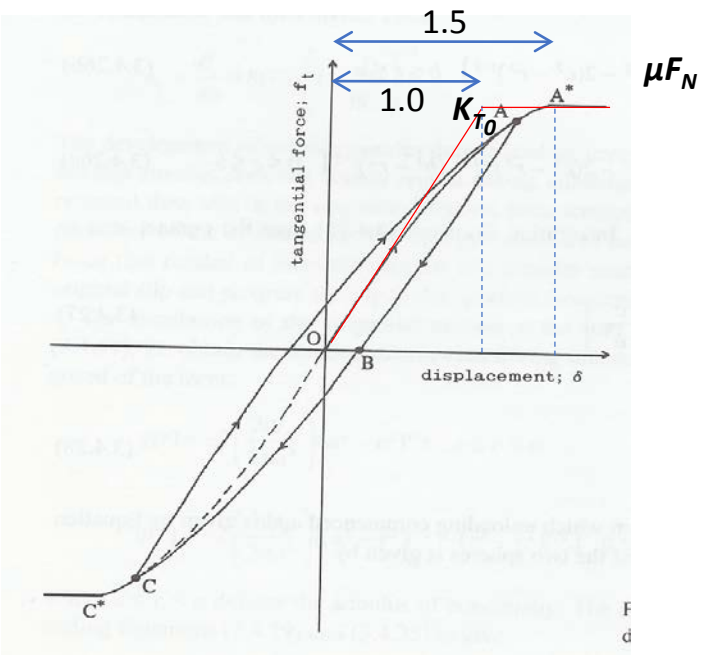

Linearized approzimztion

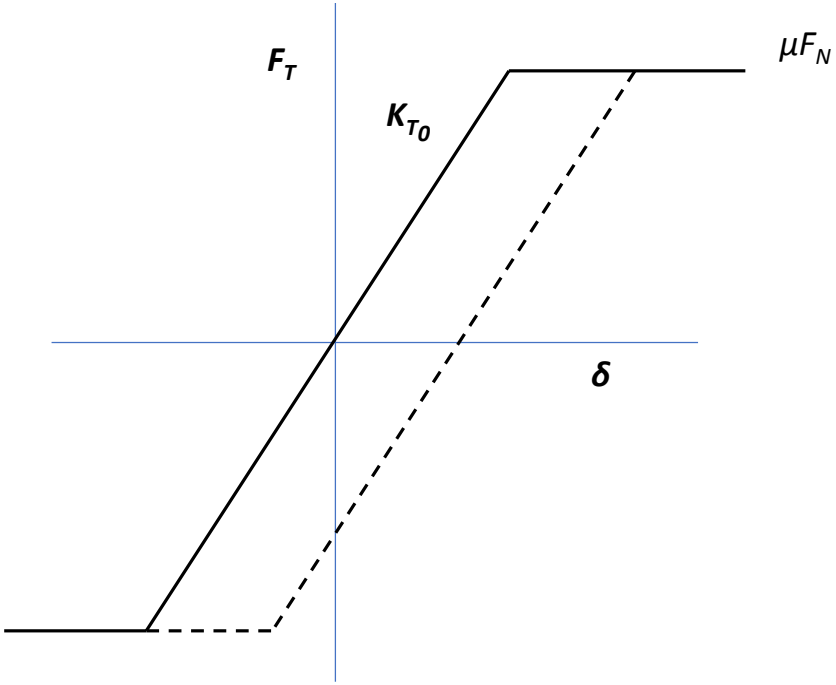

Mindlin-like Friction (simplified physical explanation)

Because of the shape of the Hertz contact normal stress distribution (~ellipsoidal) micro-slip occurs at the edges of the circular contact spot before the center slips. Mindlin referred to this as a micro-slip model.

- **Mindlin assumed the entire spot was translated uniformly in the tangential direction;**
- **After a small travel distance the outer annulus has tangential shear stresses which exceeded Coulomb friction;**
- **Thus the outer annulus experiences micro-slip.**
- **The center region does not (it is referred to as the 'stick' region).**

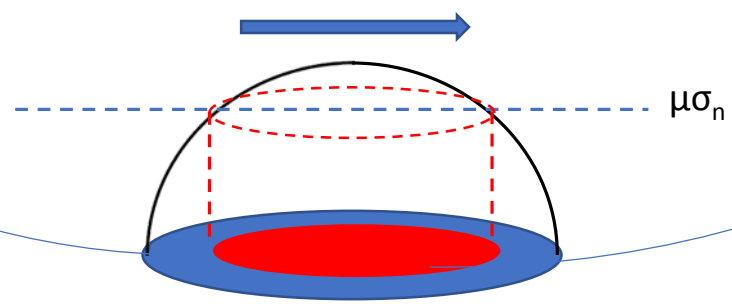

Most DEM codes which use a Hertzian normal force, and allow the stiffness of the tangential force to vary with the normal load, do it incorrectly and can have spurious generation of energy.

Friction: Mindlin-Deresiewicz (1953) model is sometimes problematic for modelers

Mindlin originally expressed his model in terms of tangential **stiffness** vs displacement, and described all stress-strain paths 'incrementally'. Both Thornton and Vu-Quoc followed Mindlin-Deresiewicz' complex logic in implementing their models.

Almost all other DEM code with Hertzian normal force and linearized Mindlin friction have introduced unphysical behavior with spurious energy creation.

(Elata & Berryman pointed out this erroneous energy creation in 1996, Mechanics of Materials 24, p229-240)

A simple set of scaling rules can corrects most errors:

1) **If the normal force decreases, keep the tangential displacement fixed and scale the tangential force down.**
2) **If the normal force increases, keep the tangential force fixed and 'scale' the origin of the tangential force so as to reproduce that force.**

This procedure 'erases' some of the micro-slip history dependence of the original Mindlin model, but introduces no drastic unphysical behavior, like energy creation!

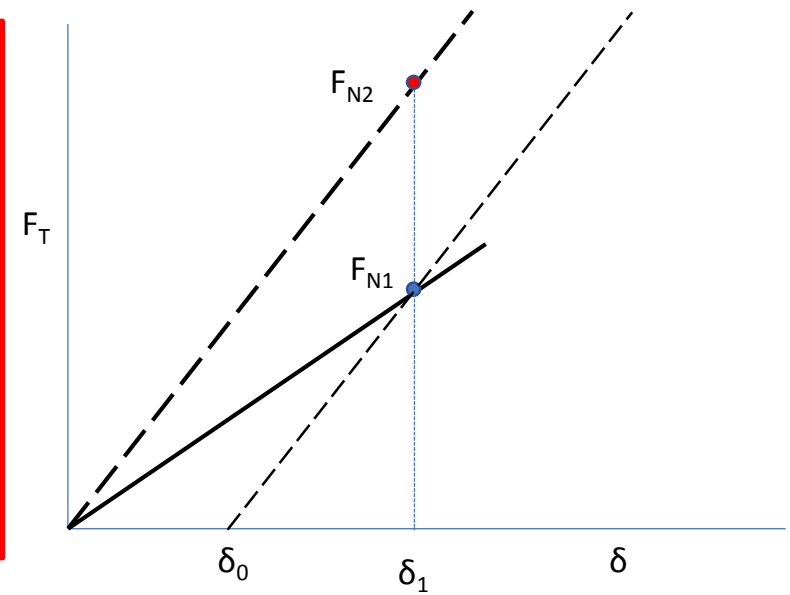

Fortunately, upon normal-direction unloading, most of the 'created' tangential spring energy is discarded in usual DEM models

Note: Linearized normal-force models do not have this 'error' and need no 'correction'

The Scale-Load-Unload-Reload (ScaLUR) algorithm for friction between spheres in contact (a quasi-2D Mindlin-Deresiewicz-like model for elastic frictional contacts – explicit form)

(Close approximations to Mindlin's non-linear description are available w/o using the complex incremental approach utilized by Thornton et al or Vu-Quoc et al.)

Loading: $T_L = T_{Limit}\left[1-\left(1-\frac{s_L}{s_{Limit}}\right)^{\beta}\right]$ and $s_L = s_{Limit}\left[1-\left(1-\frac{T_L}{T_{Limit}}\right)^{\frac{1}{\beta}}\right]$

$\beta = 3/2$, $T_{Limit} = \mu N$

The unloading and reloading functions [Mindlin & Deresiewicz, 1953] can be expressed in exactly the same form as initial loading, but with different limiting values:

Unloading: $T_U = 2T_{Limit}\left[1-\left(1-\frac{s_U}{2s_{Limit}}\right)^{\beta}\right]$ and $s_U = 2s_{Limit}\left[1-\left(1-\frac{T_U}{2T_{Limit}}\right)^{\frac{1}{\beta}}\right]$

Reloading: $T_R = 2T_{Limit}\left[1-\left(1-\frac{s_R}{2s_{Limit}}\right)^{\beta}\right]$ and $s_R = 2s_{Limit}\left[1-\left(1-\frac{T_R}{2T_{Limit}}\right)^{\frac{1}{\beta}}\right]$

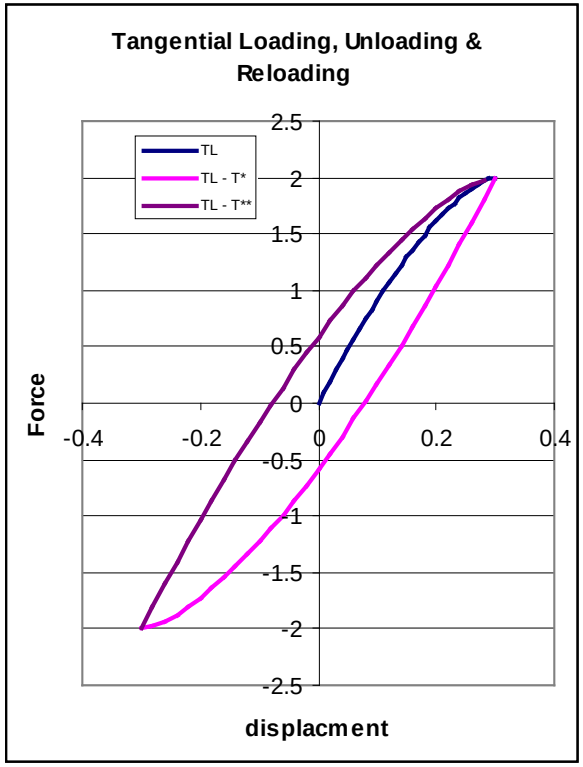

The total tangential force, T and displacement s are obtained by subtracting the *Unloading* values from the sum of the *Loading* and *Reloading* values:

$$T = T_L - T_U + T_R \quad \text{and} \quad s = s_L - s_U + s_R,$$

The normal-Force Scaling rule is applied before tangential displacement

For particles smaller than ~30µm cohesion will cause plastic deformation in contact region, the result is significant increase in Rolling Resistance

W. DING, A. J. HOWARD,
M.D. MURTHY PERI and C. CETINKAYA
Rolling resistance moment of microspheres on surfaces: contact measurements
Philosophical Magazine,
Vol. 87, No. 36, 21 December 2007, 5685–5696

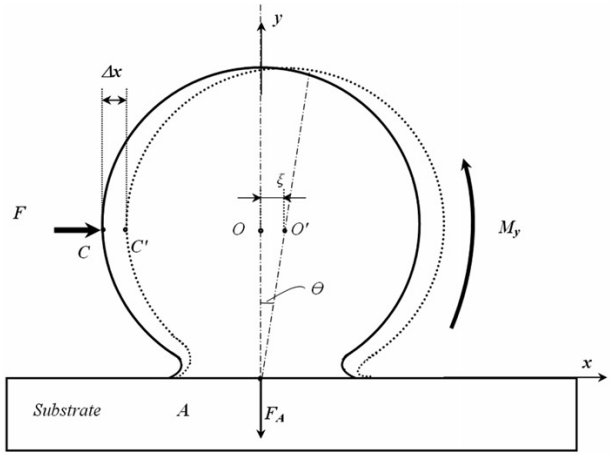

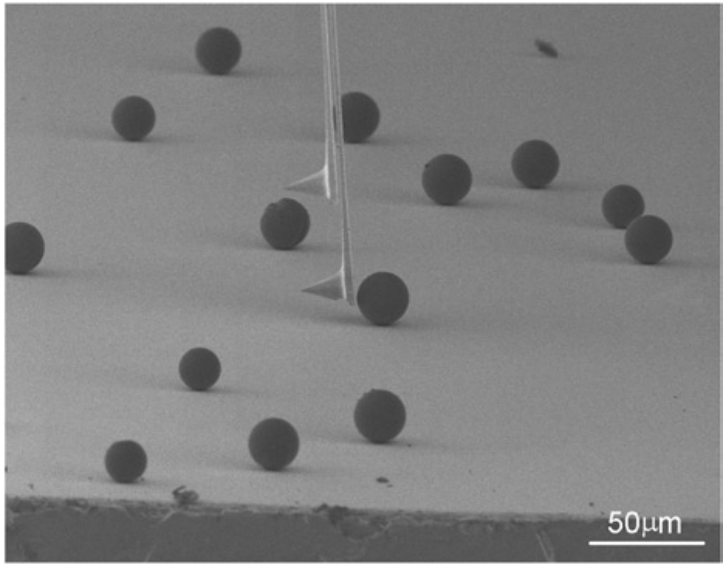

polystyrene latex (PSL) particles

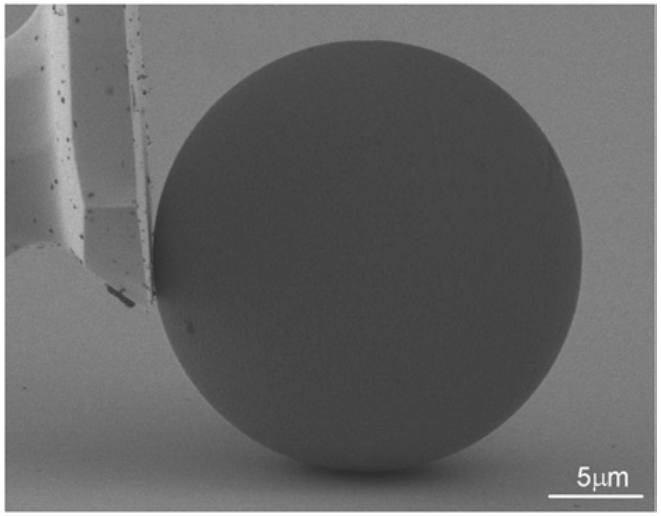

Linearized force-displacement models are consistent with these measurements

Synergestic effects of two or more simultaneous modes of motion at the contact e.g., Tractive Rolling: (Kalker) accounted for what Mindlin ignored (asymmetry)

Kalker spent much of his professional career (1967 – 2000) studying tractive rolling of elastic bodies, and developed boundary element solutions, especially for the cases where the normal force is nearly constant (as is usually the case for railroad wheels on rails – the problem of greatest interest to him).

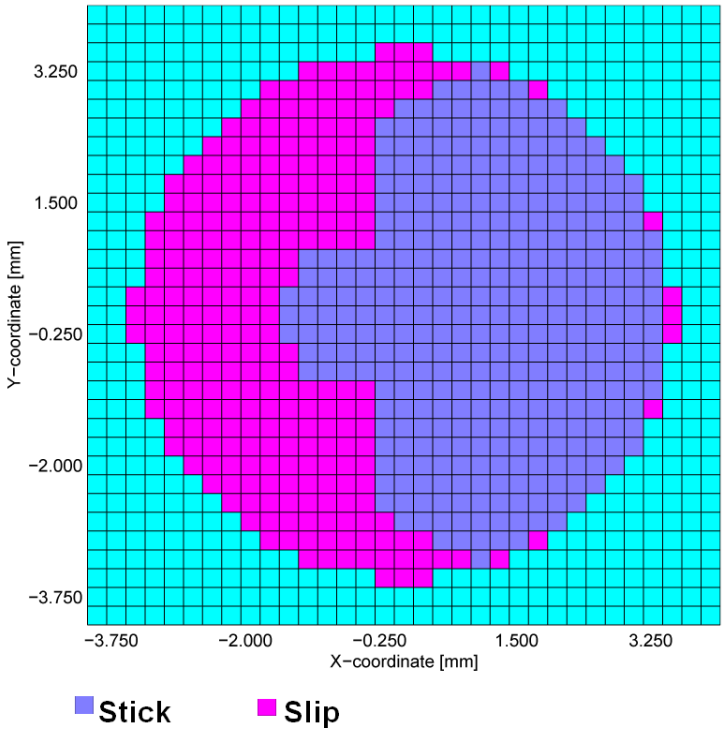

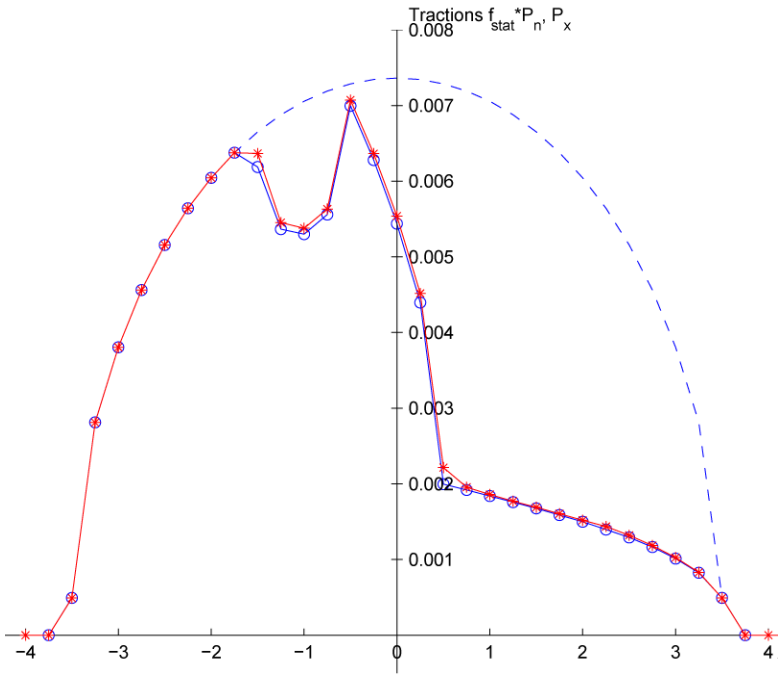

If deemed important, simplified 2-equation approximations to these effects could be added to DEM contact models – <u>they are not currently included</u>.

Interstitial air effects are generally not considered significant for low-velocity spreading simulations (not in most DEM models)

However, for dynamic 'events' like collapse of a cliff (or an avalanche), 'flooding' can occur, even with ~30µm Stainless Steel powder.

Funnel & ¼" Dia tube, filled with powder, slowly raised in a quasi-static 'angle-of-repose' test

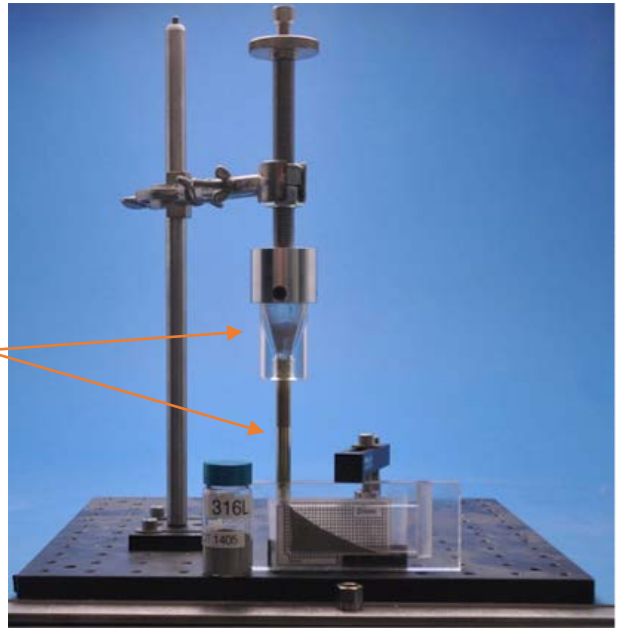

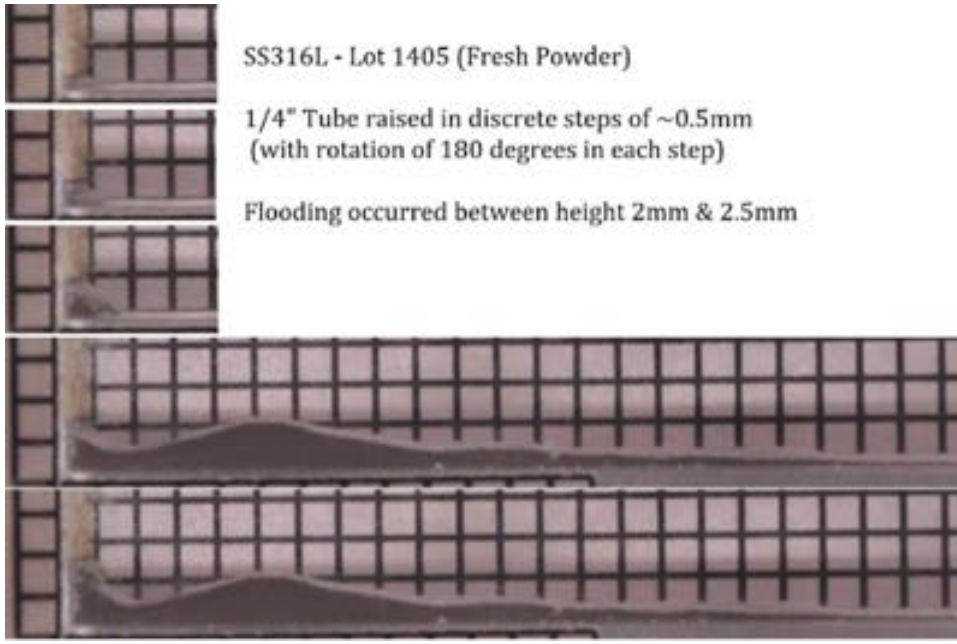

Left is an overall view of the screw attached to the top of the conical hopper and fill tube.

Right shows close up views of the tube exit region as the tube was elevated by rotating, in 180° increments – with ~0.5mm elevation change for each 180° rotation of the screw.

Contact Force Models and Discrete Element Codes (closing remarks)

- **Particle Shape was not discussed, because almost everyone recognizes the importance of shape, and almost all modern DEM codes can handle at least 'rigid-sphere-cluster' shaped particle – a good approximation to the shapes of Air- or Water-atomized particles**

- **Size distribution of particles is extremely important. Cohesion relative to weight increases with the inverse square of particle size ➔ the smallest size-fraction particles control cohesive behavior of bulk powders**

- **Cohesion alone can cause plastic deformation at contacts ➔ rolling resistance ➔ reduced bulk density (e.g. high-Housner-ratio powders) even for perfect spheres.**

- **Measurements of bulk behavior need to be under loading conditions similar to those expected in spreading conditions (higher loads compact powders, significantly altering their bulk shear strength).**

- **Approximate models of 'unimportant' phenomena can be added to simulations to test sensitivity ➔ if significant effects are observed, then improved models & measurement are needed.**